BK9X S ~ Fabricated short bend 90° with gasket



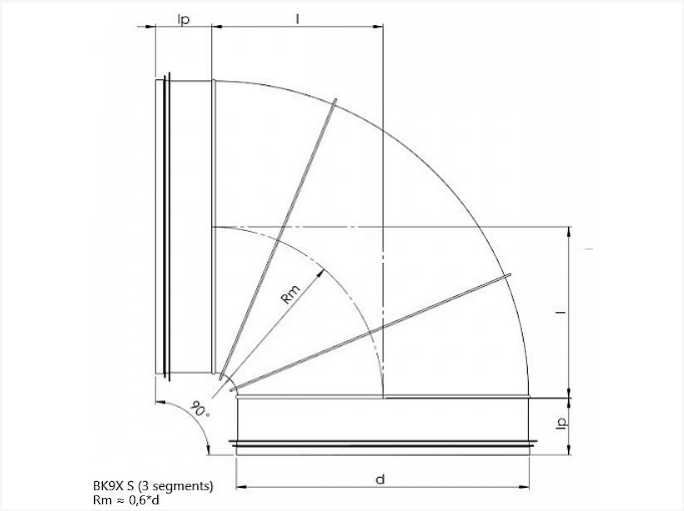

Technical specifications

SIZE D	l	KG	BOX	PIECES
224 S	135	1.30	P1	30
250 S	150	1.40	P1	20
280 S	170			
300 S	180			
315 S	190	1.98	P1	12
355 S	215			
400 S	240	2.91		
450 S	270	4.46		
500 S	300	6.46		
560 S	340	7.52		
630 S	380	9.34		

Standard 3 segments. More segments on demand.

Vento NV
Bedrijvenpark Coupure 5
B-9700 Oudenaarde

Telefoon.: +32 (0)55 30 47 20
Fax: +32 (0)55 30 47 21
E-mail: info@vento.be