B15X S ~ Fabricated bend 15° with gasket



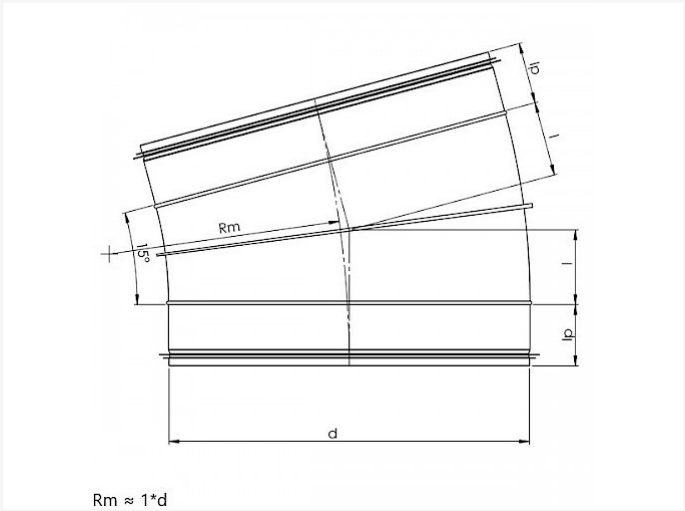

Rm ≈ 1*d

Technical specifications

SIZE D	I	KG	BOX	PIECES
224 S	29	0,54	P2	35
250 S	33	0,66	P2	25
280 S	36	0,72	P2	20
300 S	39	0.74	P1	28
315 S	41	0.80	P1	28
355 S	46	1.04	P2	10
400 S	52	1.44	P1	20
450 S	59	2.39	-	1
500 S	65	2.98	-	1
560 S	73	3.88	-	1
630 S	82		-	1
710 S	92		-	1
800 S	104	6.31	-	1

Vento NV
Bedrijvenpark Coupure 5
B-9700 Oudenaarde

Telefoon.: +32 (0)55 30 47 20
Fax: +32 (0)55 30 47 21
E-mail: info@vento.be