B3(B) S ~ Fabricated bend 30°



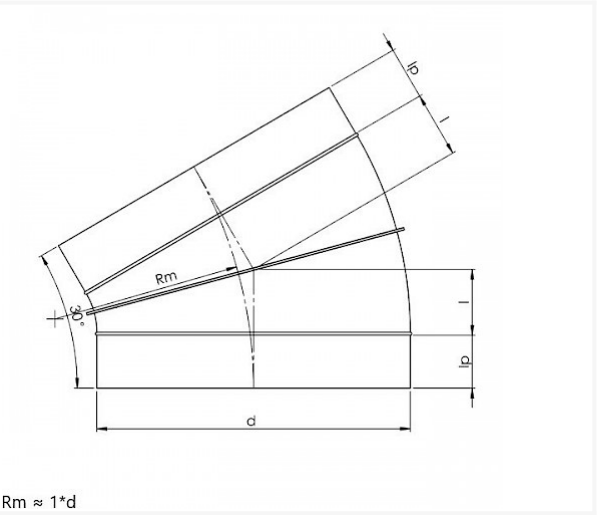

Rm ≈ 1*d

Technical specifications

SIZE D	l	KG	BOX	PIECES
224 S	60	0,57	P4	12
250 S *	67	0,78	P1	40
280 S	75	0,78	P1	25
300 S *	80	1.01	P1	20
315 S *	85	1.02	P2	10
355 S	95	1,44	P2	8
400 S	110	1.89	P1	10
450 S	120	2.50	-	1
500 S	135	3.68	-	1
560 S	150	4.33	-	1
630 S	170	5.35	-	1

* Standard: with safety edge

Vento NV
Bedrijvenpark Coupure 5
B-9700 Oudenaarde

Telefoon.: +32 (0)55 30 47 20
Fax: +32 (0)55 30 47 21
E-mail: info@vento.be