B15B S ~ Fabricated bend 15°



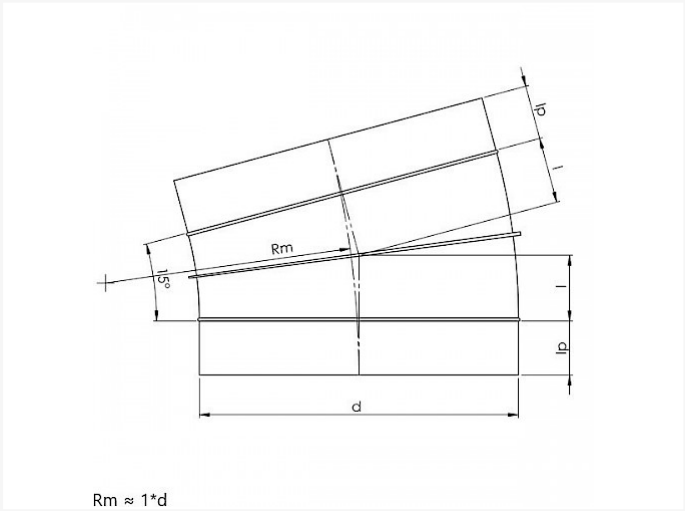

Rm ≈ 1*d

Technical specifications

SIZE D	I	KG	BOX	PIECES
224 S	29	0,56	4	20
250 S	33	0,64	P2	25
280 S	36	0.72	P1	20
300 S	39	0,82	P1	30
315 S	41	0,82	P1	30
355 S	46	0.92	P1	20
400 S	52	1.32	P1	20
450 S	59	2.39	-	1
500 S	65	2.81	-	1

Vento NV
Bedrijvenpark Coupure 5
B-9700 Oudenaarde

Telefoon.: +32 (0)55 30 47 20
Fax: +32 (0)55 30 47 21
E-mail: info@vento.be