DFBH ~ End cap for fitting with handle



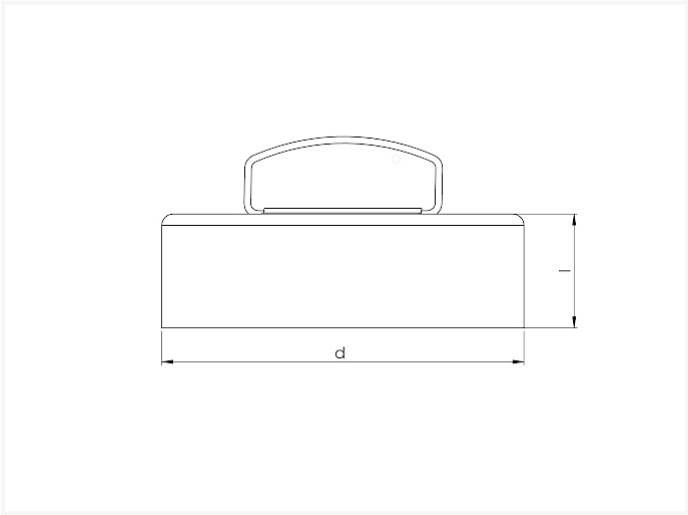

Technical specifications

DIAMETER	D	H	R	KG	BOX	STUKS/DOOS
80	80.5	40	4	0.07	24	95
100	100.5	40	4	0.1	24	50
125	125.5	40	4	0.12	24	45
150	150.6	40	4	0.16	12	60
160	160.6	40	4	0.17	12	50
180	180.6	40	4	0.21	12	56
200	200.7	40	4	0.22	12	35
250	250.8	40	4	0.35	6	55
315	315.9	40	4	0.52	6	40
355	356	40	4	0.64	6	35
400	401	40	4	0.77	2	35

Vento

Vento NV
Bedrijvenpark Coupure 5
B-9700 Oudenaarde

Telefoon.: +32 (0)55 30 47 20
Fax: +32 (0)55 30 47 21
E-mail: info@vento.be