# KRSB ~ Jet cap



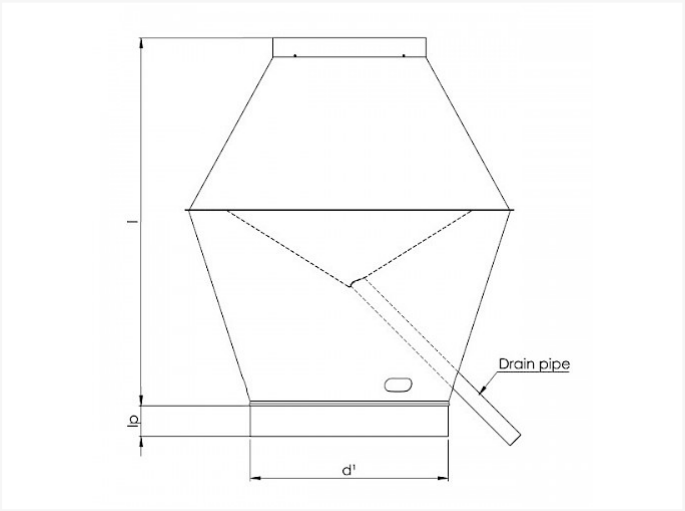


## Technical specifications

| SIZE D1 | l | IP | KG | BOX | PIECES |
|---|---|---|---|---|---|
| 100 | 225 | 40 | 0.80 | | |
| 125 | 275 | 40 | 1.16 | P4 | 12 |
| 140 | 305 | 40 | 1.19 | | |
| 150 | 325 | 40 | 1.22 | | |
| 160 | 345 | 40 | 1.32 | P2 | 10 |
| 180 | 385 | 40 | | | |
| 200 | 425 | 40 | 2.20 | P2 | 4 |
| 224 | 473 | 40 | 2.35 | P1 | 5 |
| 250 | 525 | 50 | 3.20 | P1 | 5 |
| 315 | 655 | 50 | 4.64 | P1 | 2 |
| 355 | 735 | 50 | 7.20 | P1 | 2 |
| 400 | 825 | 50 | 9.23 | | |
| 450 | 925 | 55 | | | |

**Vento NV**
Bedrijvenpark Coupure 5
B-9700 Oudenaarde

Telefoon.: +32 (0)55 30 47 20
Fax: +32 (0)55 30 47 21
E-mail: info@vento.be

| SIZE D1 | I | IP | KG | BOX | PIECES |
|---|---|---|---|---|---|
| 500 | 1025 | 55 | 16.70 | | |
| 630 | 1285 | 70 | | | |
| 710 | 1445 | 70 | | | |
| 800 | 1625 | 100 | | | |

**Vento NV**
Bedrijvenpark Coupure 5
B-9700 Oudenaarde

Telefoon.: +32 (0)55 30 47 20
Fax: +32 (0)55 30 47 21
E-mail: info@vento.be