BKF9X S ~ Fabricated short bend 90° M-F with gasket



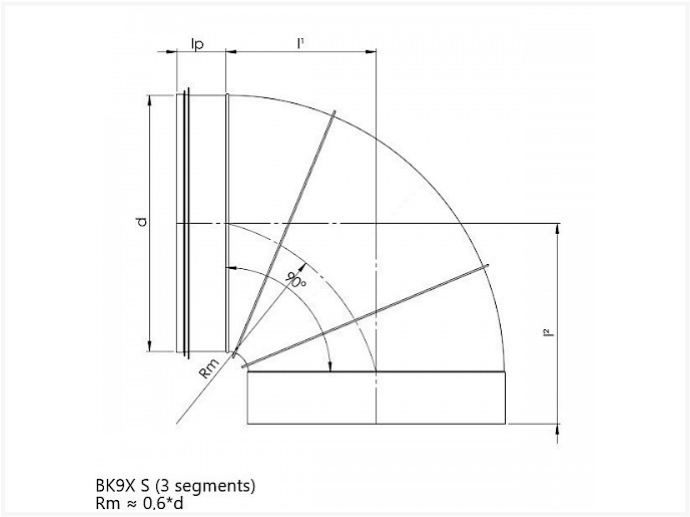

BK9X S (3 segments)
Rm ≈ 0,6*d

Technical specifications

SIZE D	I1	I2	KG	BOX	PIECES
224 S	135	170	1.20	P1	20
250 S	150	210	1.30	P1	20
280 S	170	230			
300 S	180	240			
315 S	190	250	1.94		
355 S	215	275			
400 S	240	300	2.86		
450 S	270	365	4.46		
500 S	300	385	6.38		
560 S	340	425	7.52		
630 S	380	465	9.34		

Standard 3 segments. More segments on demand.

Vento NV
Bedrijvenpark Coupure 5
B-9700 Oudenaarde

Telefoon.: +32 (0)55 30 47 20
Fax: +32 (0)55 30 47 21
E-mail: info@vento.be