DSCX ~ Single blade damper with gasket



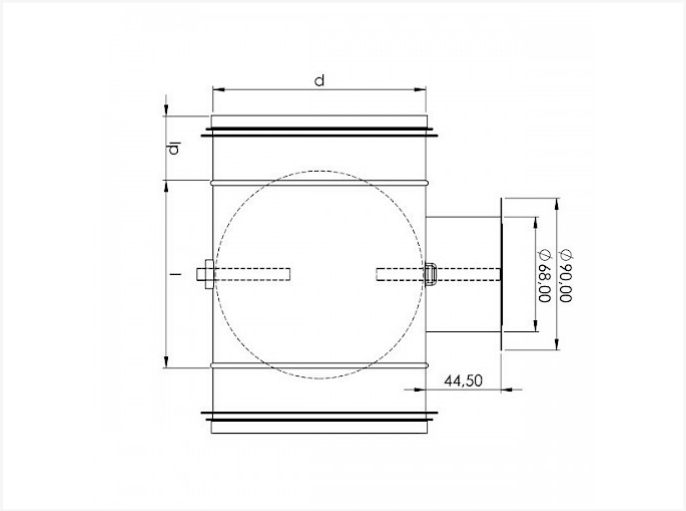

Technical specifications

SIZE D	I	KG	BOX	PIECES
80	105	0.43	P12	30
100	105	0.46	P6	40
125	105	0.57	P6	27
140	105	0.60	P4	30
150	105	0.63	P4	30
160	105	0.66	P4	27
180	105	0.82	P4	20
200	105	0.95	P2	36
224	115	1.02	P2	30
250	115	1.21	P1	36
280	115	1.19	P1	32
300	115	1.43	P1	32
315	85	1.65	P1	28

Vento NV
Bedrijvenpark Coupure 5
B-9700 Oudenaarde

Telefoon.: +32 (0)55 30 47 20
Fax: +32 (0)55 30 47 21
E-mail: info@vento.be

SIZE D	I	KG	BOX	PIECES
355	85	1.80	P1	20
400	85	2.00	P1	15
450	80	2.85	P1	10
500	80	3.52	P2	4
560	80	4.26	P1	5
630	80	5.21	P1	4
710	80	5.83	P1	5
800	95	6.86	P1	

≤ size 125: with 1 axe

> size 125: with 2 axes

Vento NV
Bedrijvenpark Coupure 5
B-9700 Oudenaarde

Telefoon.: +32 (0)55 30 47 20
Fax: +32 (0)55 30 47 21
E-mail: info@vento.be