DSCB ~ Single blade damper



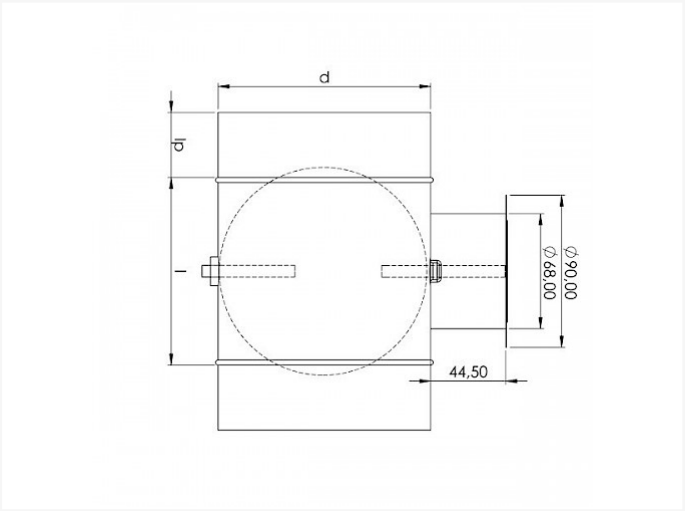

Technical specifications

SIZE	L	E	BOX	PIECES
80	90	40	P6	60
100	90	40	P6	40
125	90	40	P6	27
150	90	40	P4	30
160	90	40	P4	27
180	90	40	P4	20
200	90	40	P2	36
224	140	45	P2	30
250	140	45	P1	36
280	140	45	P1	32
300	140	45	P1	32
315	140	45	P1	28
355	140	45	P1	20

Vento NV
Bedrijvenpark Coupure 5
B-9700 Oudenaarde

Telefoon.: +32 (0)55 30 47 20
Fax: +32 (0)55 30 47 21
E-mail: info@vento.be

SIZE	L	E	BOX	PIECES
400	140	45	P1	15
450			P1	10

Vento NV
Bedrijvenpark Coupure 5
B-9700 Oudenaarde

Telefoon.: +32 (0)55 30 47 20
Fax: +32 (0)55 30 47 21
E-mail: info@vento.be