DSB ~ Single blade damper + PVC handle



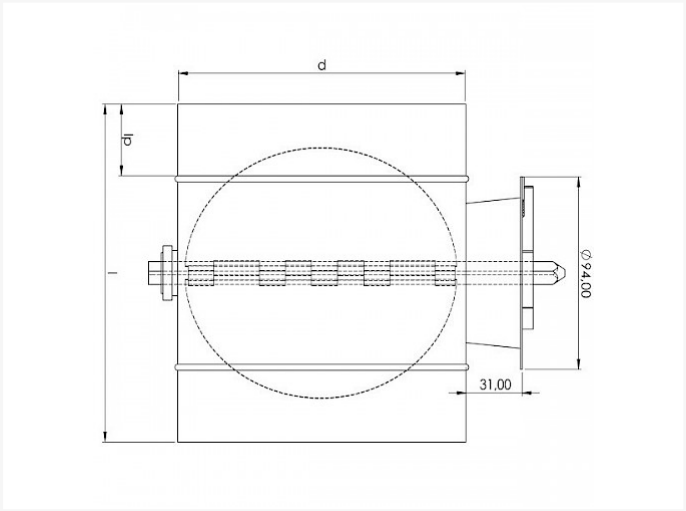

Technical specifications

SIZE	H	KG	BOX	PIECES
80	40	0.39	P6	48
100	40	0.46	P6	40
125	40	0.5	P6	27
150	40	0.6	P4	30
160	40	0.69	P4	24
180	40	0.80	P4	20
200	40	0.91	P2	36
224	40	1.02	P1	60
250	40	1.18	P1	48
280	40	1.38	P1	40
300	40	1.39	P1	32
315	40	1.4	P1	32
355	40	1.81	P1	24

Vento NV
Bedrijvenpark Coupure 5
B-9700 Oudenaarde

Telefoon.: +32 (0)55 30 47 20
Fax: +32 (0)55 30 47 21
E-mail: info@vento.be

SIZE	H	KG	BOX	PIECES
400	40	2.2	P1	20

Vento NV
Bedrijvenpark Coupure 5
B-9700 Oudenaarde

Telefoon.: +32 (0)55 30 47 20
Fax: +32 (0)55 30 47 21
E-mail: info@vento.be