CM ~ Clamp (galva)



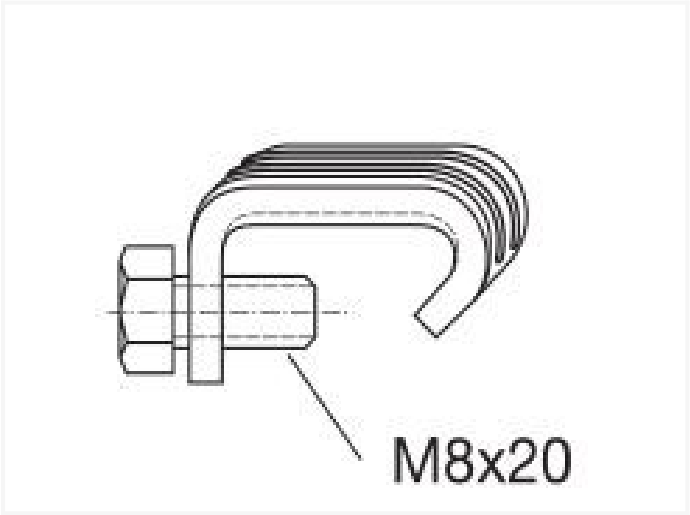

Technical specifications

CODE	THICKNESS	PIECES
CM	3,00mm	100

- material: Q235 steel with zinc plating
- thickness: 3mm
- M8x22 screw

Vento NV
Bedrijvenpark Coupure 5
B-9700 Oudenaarde

Telefoon.: +32 (0)55 30 47 20
Fax: +32 (0)55 30 47 21
E-mail: info@vento.be