ODR ~ Mounting bracket with gasket



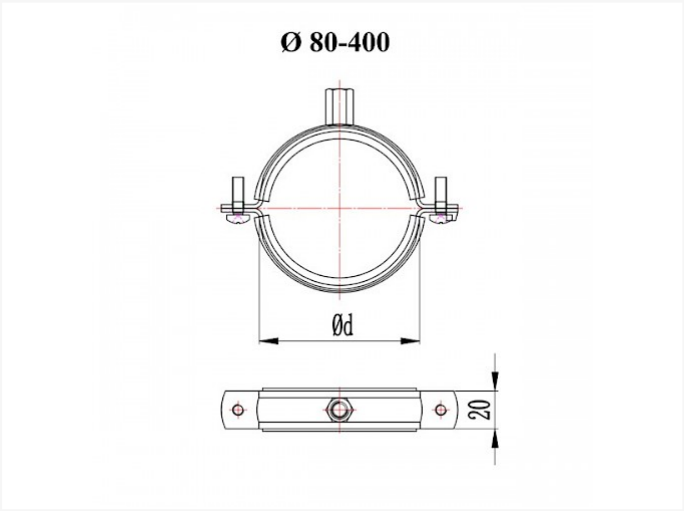

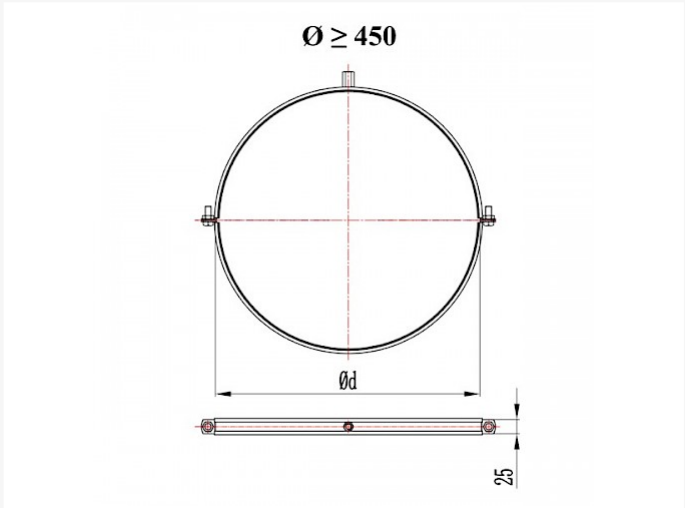

Technical specifications

SIZE	NUT	WIDTH(MM)	THICKNESS(MM)	PIECES	KG	MAX. CARRYING CAPACITY(KG)
80	M8/M10	20	1,8	150	0.15	800
100	M8/M10	20	1,8	125	0.17	800
125	M8/M10	20	1,8	100	0.20	800
150	M8/M10	20	1,8	75	0.23	800
160	M8/M10	20	1,8	75	0.25	800

Vento NV
Bedrijvenpark Coupure 5
B-9700 Oudenaarde

Telefoon.: +32 (0)55 30 47 20
Fax: +32 (0)55 30 47 21
E-mail: info@vento.be

SIZE	NUT	WIDTH(MM)	THICKNESS(MM)	PIECES	KG	MAX. CARRYING CAPACITY(KG)
180	M8/M10	20	1,8	70	0.27	800
200	M8/M10	20	1,8	60	0.28	800
224	M8/M10	20	1,8	55	032	800
250	M8/M10	20	1,8	65	0.35	800
280	M8/M10	20	1,8	50	0.38	800
300	M8/M10	20	1,8	50	0.40	800
315	M10	20	1,8	50	0.43	800
355	M10	20	1,8	50	0.47	800
400	M10	20	2,5	40	0.53	800
450	-	25	2,5	10	0.85	1.000
500	-	25	2,5	10	0.95	1.000
560	-	25	2,5	10	1.00	1.000
630	-	25	2,5	10	1.13	1.000
710	-	25	2,5	10	1.15	1.000
800	-	25	2,5	10	1.17	1.000

For suspending spiral duct in ventilation system

- material: galvanized steel with gasket
- standard sizes: 80mm to 800mm
- quick lock system on one side from 80-400mm
- locking screw M6x20 from 80-400mm, M10x25 from 450-800mm
- hex nut M8/M10 for 80-400mm

Vento

Vento NV
Bedrijvenpark Coupure 5
B-9700 Oudenaarde

Telefoon.: +32 (0)55 30 47 20
Fax: +32 (0)55 30 47 21
E-mail: info@vento.be