AV ~ Air extraction valve (metal)



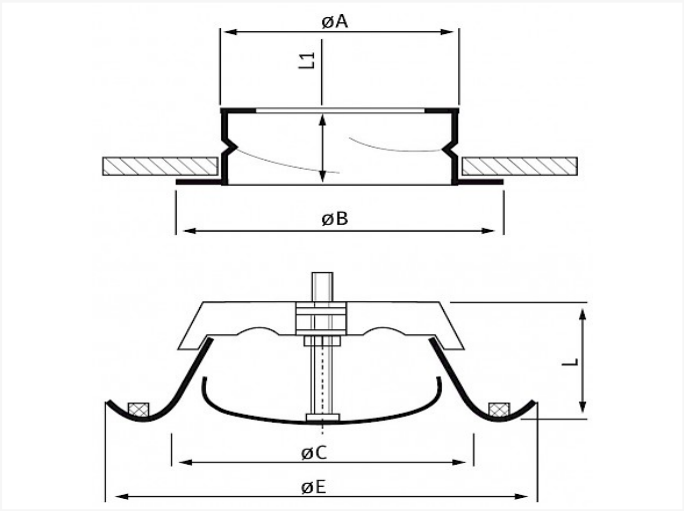

Technical specifications

SIZE	A	B	C	E	L	L1	PIECES	KG
80	79	118	62	115	55	50	7	0,25
100	98	125	76	142	55	50	7	0,3
125	123	150	100	167	65	50	7	0,45
150	148	176	120	202	65	50	7	0,58
160	159	185	128	212	65	50	7	0,61
200	198	225	157	255	65	50	7	0,83
250	248	290	215	305	75	50	7	1,02

- material: galvanized steel painted white (RAL 9016)
- the valve body is equiped with a cellular plastic gasket to make it air-tight
- the air flow is adjusted by rotating the control disc
- supplied with mounting ring

Vento NV
Bedrijvenpark Coupure 5
B-9700 Oudenaarde

Telefoon.: +32 (0)55 30 47 20
Fax: +32 (0)55 30 47 21
E-mail: info@vento.be