AVP ~ Plastic air valve



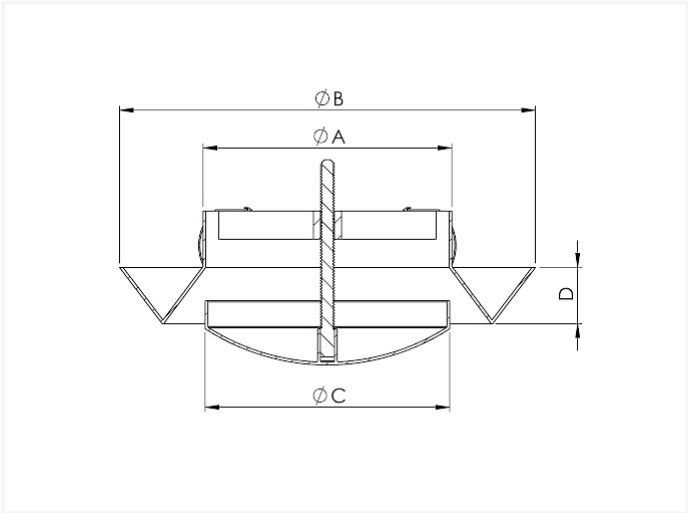

Technical specifications

SIZE	A	B	C	D	PIECES	KG
100	80	148	87	20	7	0,18
125	100	168	106	20	7	0,22
150	118	186	130	20	7	0,28
200	171	240	178	20	7	0,49

- can operate as a supply and exhaust valve
- made of polypropylene
- not painted

Vento NV
Bedrijvenpark Coupure 5
B-9700 Oudenaarde

Telefoon.: +32 (0)55 30 47 20
Fax: +32 (0)55 30 47 21
E-mail: info@vento.be