SFE ~ Air extraction valve SFE (metal)



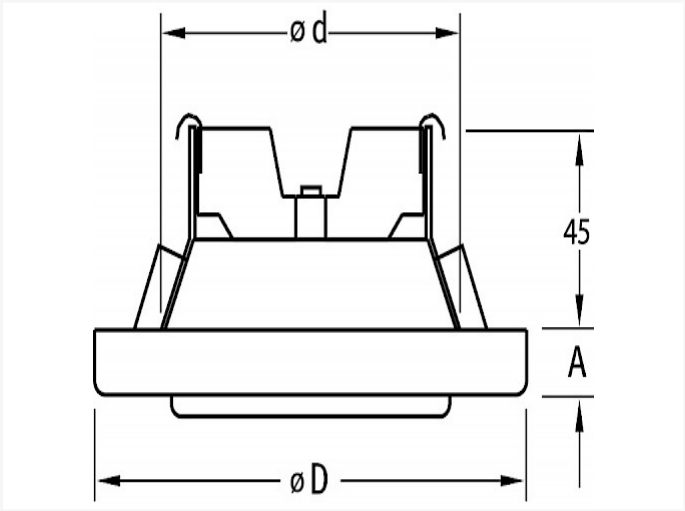

Technical specifications

SIZE D	D	A	PIECES	KG
80	106	15	7	1,3
100	135	15	7	1,75
125	160	15	7	2,85
160	191	15	7	3,05
200	238	18	7	4,4

- made of zinc-coated steel
- painted white (RAL 9010)

Vento NV
Bedrijvenpark Coupure 5
B-9700 Oudenaarde

Telefoon.: +32 (0)55 30 47 20
Fax: +32 (0)55 30 47 21
E-mail: info@vento.be