STIX ~ Insulated T souche with gasket



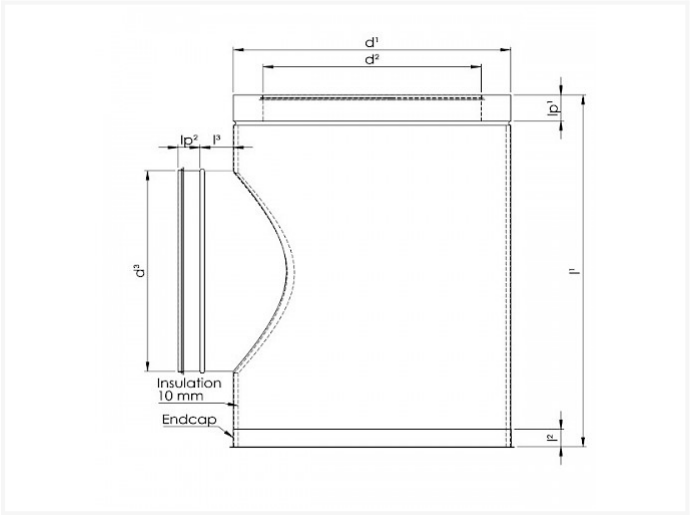

Technical specifications

SIZE	D1	D2	I1	I2	IP1	IP2	KG	BOX	PIECES
200 125	200	125	290	10	35	35	1.4	P1	35
250 160	250	160	365	15	35	35	2.0	P1	20
315 200	315	200	450	25	35	35	3.12	P1	10
355 250	355	250	490	25	35	35	3.61	PL	30
400 315	400	315	590	55	35	35	5.9	P1	16
450 355	450	355	715	55	35	35	6.97	PL	10
500 400	500	400	715	55	35	35	9.67		
560 450	560	450	815	37	70	70	10.04		
630 500	630	500	875	47	70	70	11.03		

Vento NV
Bedrijvenpark Coupure 5
B-9700 Oudenaarde

Telefoon.: +32 (0)55 30 47 20
Fax: +32 (0)55 30 47 21
E-mail: info@vento.be