RCEX ~ Excentric reducer with gasket



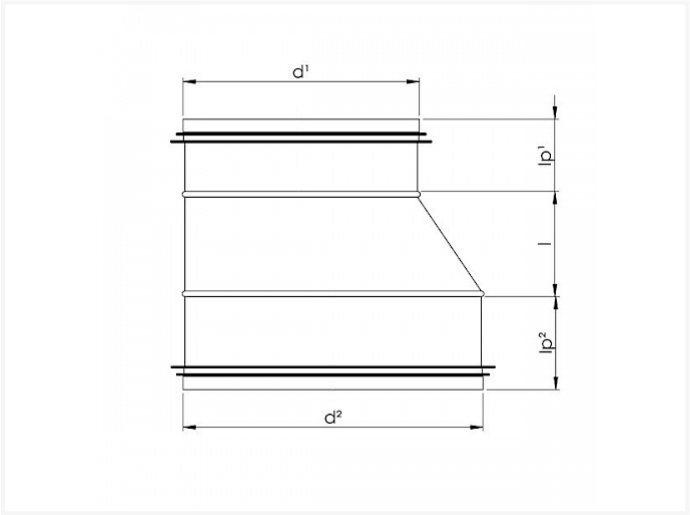

Technical specifications

CODE	D1	D2	I	KG	BOX	PIECES
RCEX 125 100 S	125	100	90	0.28		
RCEX 150 100 S	150	100	110	0.31		
RCEX 150 125 S	150	125	90			
RCEX 160 100 S	160	100	110			
RCEX 160 125 S	160	125	90	0.33		
RCEX 160 150 S	160	150	90			
RCEX 180 100 S	180	100	90			
RCEX 180 150 S	180	150	90			
RCEX 180 160 S	180	160	90			
RCEX 200 100 S	200	100	100	0.55		
RCEX 200 125 S	200	125	90	0.47		
RCEX 200 150 S	200	150	100			
RCEX 200 160 S	200	160	90	0.50		

Vento

Vento NV
Bedrijvenpark Coupure 5
B-9700 Oudenaarde

Telefoon.: +32 (0)55 30 47 20
Fax: +32 (0)55 30 47 21
E-mail: info@vento.be

CODE	D1	D2	I	KG	BOX	PIECES
RCEX 224 160 S	224	160	90	0.52		
RCEX 224 180 S	224	180	90			
RCEX 250 100 S	250	100	150	0.70		
RCEX 250 200 S	250	200	100	0.58		
RCEX 250 224 S	250	224	90			
RCEX 315 160 S	315	160	155	1.00		
RCEX 315 200 S	315	200	115	0.94		
RCEX 315 250 S	315	250	130	0.98		
RCEX 355 315 S	355	315	90	1.24		
RCEX 450 400 S	450	400	100			
RCEX 500 315 S	500	315	185	2.59	P2	16
RCEX 500 355 S	500	355	145	2.59		
RCEX 500 400 S	500	400	100	2.19	P2	20
RCEX 560 400 S	560	400	160			
RCEX 560 450 S	560	450	110			
RCEX 630 500 S	630	500	130	3.39		
RCEX 710 500 S	710	500	210			

Vento NV
Bedrijvenpark Coupure 5
B-9700 Oudenaarde

Telefoon.: +32 (0)55 30 47 20
Fax: +32 (0)55 30 47 21
E-mail: info@vento.be