BUSX ~ Bird beak 45° with gasket



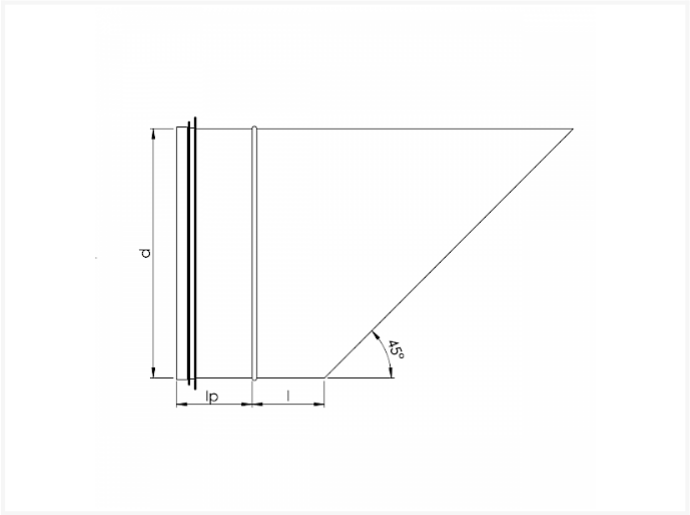

Technical specifications

SIZE D	I	IP	KG	BOX	PIECES
80	60	35	0.14		
100	60	35	0.19	P4	65
125	60	35	0.24	P4	50
150	60	35	0.32	P4	30
160	60	35	0.35	P2	60
180	60	35	0.38	P2	50
200	60	35	0.51	P2	36
250	60	35	0.80	P2	21
300	60	35	1.00	P1	26
315	60	35	1.10	P1	25
355	60	35	1.33	P1	20
400	60	35	1.94	P1	12
450	55	70	2.34	P1	7

Vento NV
Bedrijvenpark Coupure 5
B-9700 Oudenaarde

Telefoon.: +32 (0)55 30 47 20
Fax: +32 (0)55 30 47 21
E-mail: info@vento.be

SIZE D	I	IP	KG	BOX	PIECES
500	55	70	3.46	P1	6
560	55	70	4.10	P1	5
600	55	70	4.84		
630	55	70	5.00	P1	4
710	55	70	6.58	-	1
800	55	70	8.20	-	1

Vento NV
Bedrijvenpark Coupure 5
B-9700 Oudenaarde

Telefoon.: +32 (0)55 30 47 20
Fax: +32 (0)55 30 47 21
E-mail: info@vento.be