# DSC 4



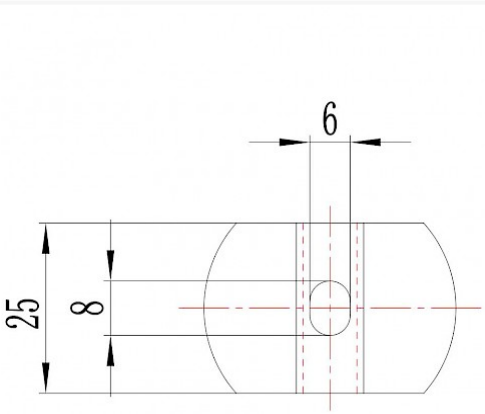


## Technical sheet

| CODE | PIECES | KG | # PIECES/DAMPER |
|---|---|---|---|
| DSC 4 | 1000 | 0.008 | 1 |

**Vento NV**
Bedrijvenpark Coupure 5
B-9700 Oudenaarde

Telefoon.: +32 (0)55 30 47 20
Fax: +32 (0)55 30 47 21
E-mail: info@vento.be