# RCF(B) ~ Reducción M-F

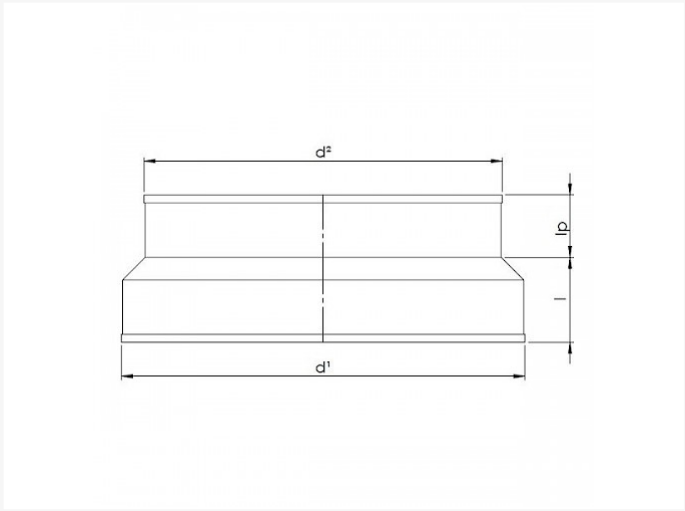


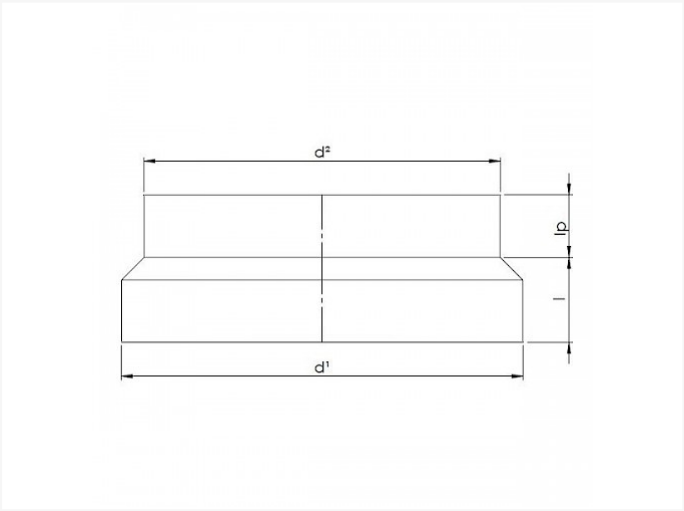




## Data técnica

| CÓDIGO | D1 | D2 | I | KG | CAJA | PIEZAS |
|---|---|---|---|---|---|---|
| RCF 100 80 | 100 | 80 | 56 | 0,11 | P12 | 72 |
| RCF 125 80 | 125 | 80 | 65 | 0.16 | P12 | 63 |
| RCFB 160 80 | 160 | 80 | 96 | 0.17 | P6 | 60 |
| RCF 125 100 | 125 | 100 | 59 | 0,17 | P12 | 63 |
| RCF 150 100 | 150 | 100 | 71 | 0,19 | P12 | 30 |
| RCF 150 125 | 150 | 125 | 56 | 0,2 | P12 | 54 |

**Vento NV**
Bedrijvenpark Coupure 5
B-9700 Oudenaarde

Telefoon.: +32 (0)55 30 47 20
Fax: +32 (0)55 30 47 21
E-mail: info@vento.be

| CÓDIGO | D1 | D2 | I | KG | CAJA | PIEZAS |
|---|---|---|---|---|---|---|
| RCF 160 100 | 160 | 100 | 74 | 0,23 | P6 | 60 |
| RCF 160 125 | 160 | 125 | 64 | 0,21 | P6 | 60 |
| RCFB 160 150 | 160 | 150 | 62 | 0.22 | P6 | 56 |
| RCFB 180 125 | 180 | 125 | 83 | 0.26 | P6 | 45 |
| RCFB 180 150 | 180 | 150 | 72 | 0.24 | P6 | 60 |
| RCFB 180 160 | 180 | 160 | 70 | 0.24 | P6 | 60 |
| RCF 200 100 | 200 | 100 | 100 | 0,31 | P6 | 52 |
| RCF 200 125 | 200 | 125 | 78 | 0,3 | P6 | 45 |
| RCF 200 150 | 200 | 150 | 69 | 0,28 | P6 | 60 |
| RCF 200 160 | 200 | 160 | 59 | 0,29 | P4 | 75 |
| RCFB 200 180 | 200 | 180 | 62 | 0.25 | | |
| RCFB 224 160 | 224 | 160 | 90 | 0.30 | | |
| RCFB 224 180 | 224 | 180 | 68 | 0.28 | | |
| RCFB 224 200 | 224 | 200 | | 0.27 | | |
| RCFB 250 125 | 250 | 125 | 115 | 0.48 | P4 | 28 |
| RCFB 250 150 | 250 | 150 | 105 | 0.43 | | |
| RCF 250 160 | 250 | 160 | 93 | 0,42 | P2 | 90 |
| RCFB 250 180 | 250 | 180 | 90 | 0.43 | | |
| RCF 250 200 | 250 | 200 | 64 | 0,38 | P2 | 96 |
| RCFB 250 224 | 250 | 224 | 65 | 0.34 | | |
| RCFB 300 200 | 300 | 200 | 105 | 0.58 | | |
| RCFB 300 250 | 300 | 250 | 80 | 0.45 | | |
| RCF 315 160 | 315 | 160 | 142 | 0,63 | P2 | 56 |
| RCF 315 200 | 315 | 200 | 114 | 0,59 | P2 | 48 |
| RCF 315 250 | 315 | 250 | 90 | 0,52 | P2 | 46 |

Vento

**Vento NV**
Bedrijvenpark Coupure 5
B-9700 Oudenaarde

Telefoon.: +32 (0)55 30 47 20
Fax: +32 (0)55 30 47 21
E-mail: info@vento.be

| CÓDIGO | D1 | D2 | I | KG | CAJA | PIEZAS |
|---|---|---|---|---|---|---|
| RCFB 355 250 S | 355 | 250 | 155 | 1,16 | P1 | 60 |
| RCFB 355 315 S | 355 | 315 | 115 | 1,1 | P1 | 66 |
| RCFB 400 250 | 400 | 250 | 141 | 1.4 | | |
| RCFB 400 315 | 400 | 315 | 110 | 0.7 | P2 | 24 |

**Vento NV**
Bedrijvenpark Coupure 5
B-9700 Oudenaarde

Telefoon.: +32 (0)55 30 47 20
Fax: +32 (0)55 30 47 21
E-mail: info@vento.be