# TLB ~ Pieza Tee soldada a 90°



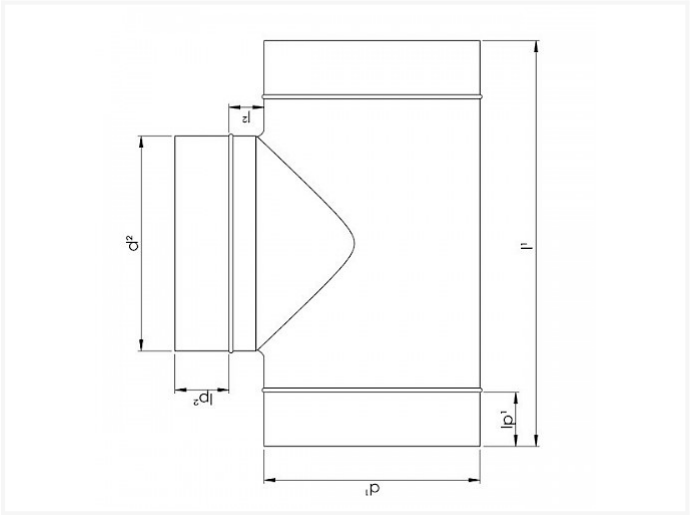


## Data técnica

| DIÁMETRO | D1 | D2 | I1 | I2 | IP1 | IP2 | CAJA | PIEZAS |
|---|---|---|---|---|---|---|---|---|
| 100 80 | 100 | 80 | 221 | 22 | 40 | 40 | P2 | 84 |
| 125 80 | 125 | 80 | 220 | 22 | 40 | 40 | P2 | 60 |
| 100 100 | 100 | 100 | 240 | 20 | 40 | 40 | P2 | 77 |
| 125 100 | 125 | 100 | 244 | 22 | 40 | 40 | P2 | 54 |
| 150 100 | 150 | 100 | 242 | 22 | 40 | 40 | P2 | 40 |
| 160 100 | 160 | 100 | 242 | 22 | 40 | 40 | P1 | 78 |
| 200 100 | 200 | 100 | 242 | 22 | 40 | 40 | P1 | 48 |
| 250 100 | 250 | 100 | 242 | 22 | 40 | 40 | P1 | 30 |
| 125 125 | 125 | 125 | 267 | 22 | 40 | 40 | P2 | 48 |
| 150 125 | 150 | 125 | 267 | 22 | 40 | 40 | P2 | 35 |
| 160 125 | 160 | 125 | 267 | 22 | 40 | 40 | P1 | 69 |
| 200 125 | 200 | 125 | 267 | 22 | 40 | 40 | P1 | 43 |
| 250 125 | 250 | 125 | 267 | 25 | 40 | 40 | P1 | 24 |

Vento

**Vento NV**
Bedrijvenpark Coupure 5
B-9700 Oudenaarde

Telefoon.: +32 (0)55 30 47 20
Fax: +32 (0)55 30 47 21
E-mail: info@vento.be

| DIÁMETRO | D1 | D2 | I1 | I2 | IP1 | IP2 | CAJA | PIEZAS |
|---|---|---|---|---|---|---|---|---|
| 150 150 | 150 | 150 | 292 | 22 | 40 | 40 | P1 | 60 |
| 160 160 | 160 | 160 | 300 | 22 | 40 | 40 | P1 | 60 |
| 200 160 | 200 | 160 | 302 | 25 | 40 | 40 | P1 | 36 |
| 250 160 | 250 | 160 | 302 | 22 | 40 | 40 | P1 | 21 |
| 200 200 | 200 | 200 | 340 | 22 | 40 | 40 | P1 | 31 |
| 250 200 | 250 | 200 | 342 | 22 | 40 | 40 | P1 | 20 |
| 250 250 | 250 | 250 | 392 | 22 | 40 | 40 | P1 | 18 |
| 315 315 | 315 | 315 | 457 | 27 | 40 | 40 | P1 | 10 |

**Vento NV**
Bedrijvenpark Coupure 5
B-9700 Oudenaarde

Telefoon.: +32 (0)55 30 47 20
Fax: +32 (0)55 30 47 21
E-mail: info@vento.be