# RCEX ~ Reducción asimétrica con goma



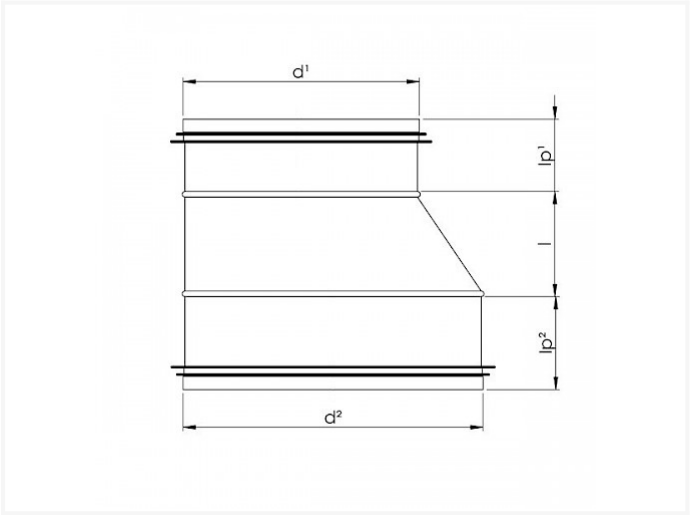


## Data técnica

| CÓDIGO | D1 | D2 | I | KG | CAJA | PIEZAS |
|---|---|---|---|---|---|---|
| RCEX 125 100 S | 125 | 100 | 90 | 0.28 | | |
| RCEX 150 100 S | 150 | 100 | 110 | 0.31 | | |
| RCEX 150 125 S | 150 | 125 | 90 | | | |
| RCEX 160 100 S | 160 | 100 | 110 | | | |
| RCEX 160 125 S | 160 | 125 | 90 | 0.33 | | |
| RCEX 160 150 S | 160 | 150 | 90 | | | |
| RCEX 180 100 S | 180 | 100 | 90 | | | |
| RCEX 180 150 S | 180 | 150 | 90 | | | |
| RCEX 180 160 S | 180 | 160 | 90 | | | |
| RCEX 200 100 S | 200 | 100 | 100 | 0.55 | | |
| RCEX 200 125 S | 200 | 125 | 90 | 0.47 | | |
| RCEX 200 150 S | 200 | 150 | 100 | | | |
| RCEX 200 160 S | 200 | 160 | 90 | 0.50 | | |

**Vento NV**
Bedrijvenpark Coupure 5
B-9700 Oudenaarde

Telefoon.: +32 (0)55 30 47 20
Fax: +32 (0)55 30 47 21
E-mail: info@vento.be

| CÓDIGO | D1 | D2 | I | KG | CAJA | PIEZAS |
|---|---|---|---|---|---|---|
| RCEX 224 160 S | 224 | 160 | 90 | 0.52 | | |
| RCEX 224 180 S | 224 | 180 | 90 | | | |
| RCEX 250 100 S | 250 | 100 | 150 | 0.70 | | |
| RCEX 250 200 S | 250 | 200 | 100 | 0.58 | | |
| RCEX 250 224 S | 250 | 224 | 90 | | | |
| RCEX 315 160 S | 315 | 160 | 155 | 1.00 | | |
| RCEX 315 200 S | 315 | 200 | 115 | 0.94 | | |
| RCEX 315 250 S | 315 | 250 | 130 | 0.98 | | |
| RCEX 355 315 S | 355 | 315 | 90 | 1.24 | | |
| RCEX 450 400 S | 450 | 400 | 100 | | | |
| RCEX 500 315 S | 500 | 315 | 185 | 2.59 | P2 | 16 |
| RCEX 500 355 S | 500 | 355 | 145 | 2.59 | | |
| RCEX 500 400 S | 500 | 400 | 100 | 2.19 | P2 | 20 |
| RCEX 560 400 S | 560 | 400 | 160 | | | |
| RCEX 560 450 S | 560 | 450 | 110 | | | |
| RCEX 630 500 S | 630 | 500 | 130 | 3.39 | | |
| RCEX 710 500 S | 710 | 500 | 210 | | | |

**Vento NV**
Bedrijvenpark Coupure 5
B-9700 Oudenaarde

Telefoon.: +32 (0)55 30 47 20
Fax: +32 (0)55 30 47 21
E-mail: info@vento.be