RCEPFX ~ Reducción manual plana asimétrica M/F con goma



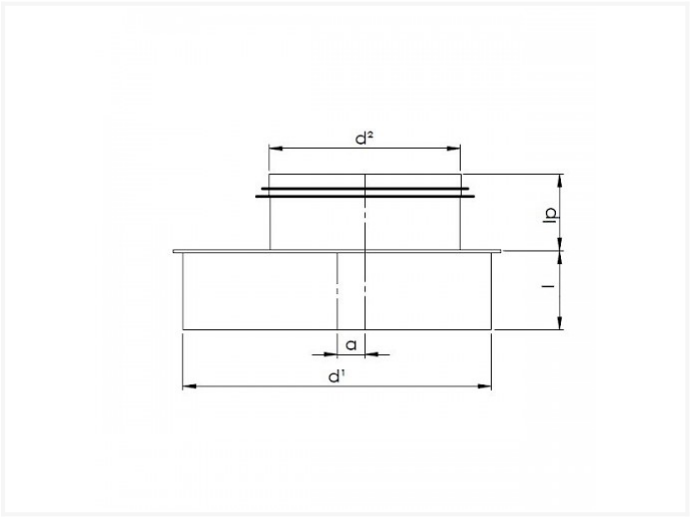

CÓDIGO	D1	D2	I	A
RCEPFX 160 100 S	160	100	41.5	10
RCEPFX 200 125 S	200	125	41.5	17
RCEPFX 200 160 S	200	160	41.5	0
RCEPFX 250 125 S	250	125	41.5	42
RCEPFX 250 160 S	250	160	41.5	25
RCEPFX 250 200 S	250	200	41.5	5
RCEPFX 315 125 S	315	125	41.5	75
RCEPFX 315 160 S	315	160	41.5	57
RCEPFX 315 250 S	315	250	41.5	12
RCEPFX 355 200 S	355	200	41.5	57
RCEPFX 355 315 S	355	315	51.5	0
RCEPFX 400 200 S	400	200	41.7	80
RCEPFX 400 250 S	400	250	41.7	55

Vento NV
Bedrijvenpark Coupure 5
B-9700 Oudenaarde

Telefoon.: +32 (0)55 30 47 20
Fax: +32 (0)55 30 47 21
E-mail: info@vento.be

CÓDIGO	D1	D2	I	A
RCEPFX 400 315 S	400	315	51.7	22
RCEPFX 400 355 S	400	355	51.7	2
RCEPFX 500 400 S	500	400	52	30

Vento NV
Bedrijvenpark Coupure 5
B-9700 Oudenaarde

Telefoon.: +32 (0)55 30 47 20
Fax: +32 (0)55 30 47 21
E-mail: info@vento.be