# PSB45 ~ Zadelstuk 45°



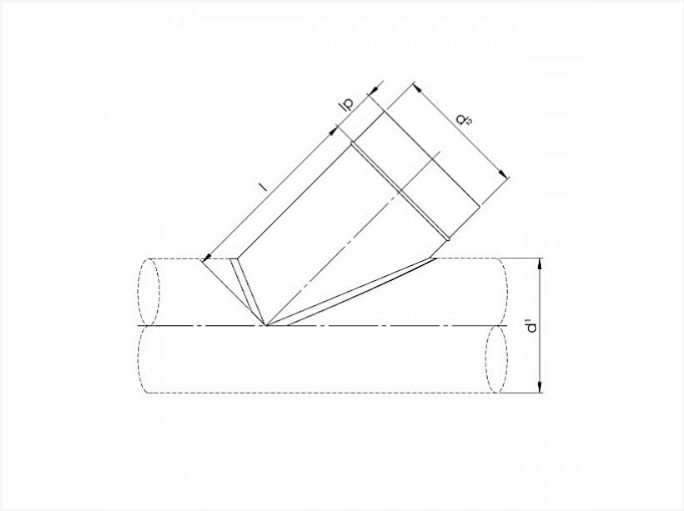


## Technische specificaties

| CODE | D1 | D2 | I | IP | KG | DOOS | STUKS |
|---|---|---|---|---|---|---|---|
| PSB45 80 80 S | 80 | 80 | 145 | 40 | 0.22 | | |
| PSB45 100 80 S | 100 | 80 | 160 | 40 | 0.22 | | |
| PSB45 100 100 S | 100 | 100 | 170 | 40 | 0.22 | P6 | 60 |
| PSB45 125 80 S | 125 | 80 | 177 | 40 | 0.22 | | |
| PSB45 125 100 S | 125 | 100 | 187 | 40 | 0.20 | P6 | 60 |
| PSB45 125 125 S | 125 | 125 | 200 | 40 | 0.28 | P12 | 16 |
| PSB45 140 80 S | 140 | 80 | 188 | 40 | | | |
| PSB45 140 100 S | 140 | 100 | 198 | 40 | | | |
| PSB45 140 125 S | 140 | 125 | 210 | 40 | | | |
| PSB45 140 140 S | 140 | 140 | 218 | 40 | | | |
| PSB45 150 80 S | 150 | 80 | 195 | 40 | | | |
| PSB45 150 100 S | 150 | 100 | 205 | 40 | 0.19 | | |
| PSB45 150 125 S | 150 | 125 | 217 | 40 | | | |

Vento

**Vento NV**
Bedrijvenpark Coupure 5
B-9700 Oudenaarde

Telefoon.: +32 (0)55 30 47 20
Fax: +32 (0)55 30 47 21
E-mail: info@vento.be

| CODE | D1 | D2 | I | IP | KG | DOOS | STUKS |
|---|---|---|---|---|---|---|---|
| PSB45 150 150 S | 150 | 150 | 230 | 40 | 0.37 | | |
| PSB45 160 80 S | 160 | 80 | 202 | 40 | 0.13 | | |
| PSB45 160 100 S | 160 | 100 | 212 | 40 | 0.19 | P6 | 60 |
| PSB45 160 125 S | 160 | 125 | 224 | 40 | 0.26 | P12 | 14 |
| PSB45 160 140 S | 160 | 140 | 232 | 40 | | | |
| PSB45 160 150 S | 160 | 150 | 237 | 40 | | | |
| PSB45 160 160 S | 160 | 160 | 242 | 40 | 0.40 | P6 | 20 |
| PSB45 180 80 S | 180 | 80 | 217 | 40 | | | |
| PSB45 180 100 S | 180 | 100 | 226 | 40 | | | |
| PSB45 180 125 S | 180 | 125 | 240 | 40 | | | |
| PSB45 180 140 S | 180 | 140 | 246 | 40 | | | |
| PSB45 180 150 S | 180 | 150 | 251 | 40 | | | |
| PSB45 180 160 S | 180 | 160 | 256 | 40 | | | |
| PSB45 180 180 S | 180 | 180 | 256 | 40 | | | |
| PSB45 200 80 S | 200 | 80 | 230 | 40 | 0.13 | | |
| PSB45 200 100 S | 200 | 100 | 240 | 40 | | | |
| PSB45 200 125 S | 200 | 125 | 253 | 40 | 0.18 | | |
| PSB45 200 140 S | 200 | 140 | 260 | 40 | | | |
| PSB45 200 150 S | 200 | 150 | 265 | 40 | 0.34 | | |
| PSB45 200 160 S | 200 | 160 | 270 | 40 | 0.35 | P6 | 20 |
| PSB45 200 180 S | 200 | 180 | 280 | 40 | | | |
| PSB45 200 200 S | 200 | 200 | 290 | 40 | 0.59 | P6 | 10 |
| PSB45 250 80 S | 250 | 80 | 265 | 40 | | | |
| PSB45 250 100 S | 250 | 100 | 275 | 40 | 0.18 | | |
| PSB45 250 125 S | 250 | 125 | 287 | 40 | 0.25 | | |

Vento

**Vento NV**
Bedrijvenpark Coupure 5
B-9700 Oudenaarde

Telefoon.: +32 (0)55 30 47 20
Fax: +32 (0)55 30 47 21
E-mail: info@vento.be

| CODE | D1 | D2 | I | IP | KG | DOOS | STUKS |
|---|---|---|---|---|---|---|---|
| PSB45 250 140 S | 250 | 140 | 292 | 40 | | | |
| PSB45 250 150 S | 250 | 150 | 300 | 40 | 0.33 | | |
| PSB45 250 160 S | 250 | 150 | 305 | 40 | 0.37 | | |
| PSB45 250 200 S | 250 | 200 | 325 | 40 | 0.86 | P4 | 20 |
| PSB45 250 224 S | 250 | 224 | 337 | 40 | | | |
| PSB45 250 250 S | 250 | 250 | 350 | 40 | 0.86 | | |
| PSB45 315 80 S | 315 | 80 | 313 | 40 | | | |
| PSB45 315 100 S | 315 | 100 | 321 | 40 | 0.17 | | |
| PSB45 315 125 S | 315 | 125 | 334 | 40 | 0.24 | | |
| PSB45 315 160 S | 315 | 160 | 351 | 40 | 0.80 | | |
| PSB45 315 200 S | 315 | 200 | 371 | 40 | 0.52 | | |
| PSB45 315 250 S | 315 | 250 | 396 | 40 | 0.80 | | |
| PSB45 315 315 S | 315 | 315 | 429 | 40 | 1.30 | | |
| PSB45 355 80 S | 355 | 80 | 338 | 40 | | | |
| PSB45 355 100 S | 355 | 100 | 347 | 40 | 0.24 | | |
| PSB45 355 125 S | 355 | 125 | 363 | 40 | 0.24 | P12 | 16 |
| PSB45 355 160 S | 355 | 160 | 380 | 40 | 0.36 | | |
| PSB45 355 200 S | 355 | 200 | 400 | 40 | 0.50 | P4 | 20 |
| PSB45 355 250 S | 355 | 250 | 425 | 40 | 0.80 | | |
| PSB45 355 315 S | 355 | 315 | 457 | 40 | 1.20 | | |
| PSB45 355 355 S | 355 | 355 | 477 | 40 | 1.60 | | |
| PSB45 400 80 S | 400 | 80 | 369 | 40 | | | |
| PSB45 400 100 S | 400 | 100 | 380 | 40 | | | |
| PSB45 400 125 S | 400 | 125 | 394 | 40 | 0.24 | | |

Vento

**Vento NV**
Bedrijvenpark Coupure 5
B-9700 Oudenaarde

Telefoon.: +32 (0)55 30 47 20
Fax: +32 (0)55 30 47 21
E-mail: info@vento.be

| CODE | D1 | D2 | I | IP | KG | DOOS | STUKS |
|---|---|---|---|---|---|---|---|
| PSB45 400 160 S | 400 | 160 | 408 | 40 | 0.35 | | |
| PSB45 400 200 S | 400 | 200 | 431 | 40 | 0.40 | | |
| PSB45 400 250 S | 400 | 250 | 456 | 40 | 0.85 | | |
| PSB45 400 315 S | 400 | 315 | 489 | 40 | 1.10 | | |
| PSB45 400 355 S | 400 | 355 | 509 | 40 | 1.40 | | |
| PSB45 400 400 S | 400 | 400 | 531 | 40 | 2.20 | | |
| PSB 450 80 S | 450 | 80 | 430 | 40 | | | |
| PSB 450 100 S | 450 | 100 | 445 | 40 | | | |
| PSB 450 125 S | 450 | 125 | 458 | 40 | | | |
| PSB45 450 160 S | 450 | 160 | 482 | 40 | 0.41 | | |
| PSB45 450 200 S | 450 | 200 | 497 | 40 | 0.58 | | |
| PSB45 450 250 S | 450 | 250 | 522 | 40 | 0.73 | | |
| PSB45 450 315 S | 450 | 315 | 544 | 40 | 1.10 | | |
| PSB45 450 355 S | 450 | 355 | 574 | 40 | 1.55 | | |
| PSB45 450 400 S | 450 | 400 | 597 | 40 | 2.31 | | |
| PSB45 450 450 S | 450 | 450 | 592 | 70 | 2.99 | | |
| PSB45 500 80 S | 500 | 80 | 478 | 40 | | | |
| PSB45 500 100 S | 500 | 100 | 485 | 40 | | | |
| PSB45 500 125 S | 500 | 125 | 500 | 40 | | | |
| PSB45 500 160 S | 500 | 160 | 519 | 40 | 0.67 | | |
| PSB45 500 200 S | 500 | 200 | 540 | 40 | 0.67 | | |
| PSB45 500 250 S | 500 | 250 | 564 | 40 | 0.71 | | |
| PSB45 500 315 S | 500 | 315 | 597 | 40 | 1.20 | | |
| PSB45 500 355 S | 500 | 355 | 617 | 40 | 1.78 | | |

Vento

**Vento NV**
Bedrijvenpark Coupure 5
B-9700 Oudenaarde

Telefoon.: +32 (0)55 30 47 20
Fax: +32 (0)55 30 47 21
E-mail: info@vento.be

| CODE | D1 | D2 | I | IP | KG | DOOS | STUKS |
|---|---|---|---|---|---|---|---|
| PSB45 500 400 S | 500 | 400 | 639 | 40 | 2.20 | | |
| PSB45 500 450 S | 500 | 450 | 634 | 70 | 2.28 | | |
| PSB45 500 500 S | 500 | 500 | 659 | 70 | 0.22 | | |
| PSB45 560 80 S | 560 | 80 | 505 | 40 | | | |
| PSB45 560 100 S | 560 | 100 | 511 | 40 | | | |
| PSB45 560 125 S | 560 | 125 | 534 | 40 | | | |
| PSB45 560 160 S | 560 | 160 | 550 | 40 | | | |
| PSB45 560 200 S | 560 | 200 | 567 | 40 | 0.56 | | |
| PSB45 560 250 S | 560 | 250 | 600 | 40 | 0.81 | | |
| PSB45 560 315 S | 560 | 315 | 632 | 40 | 1.21 | | |
| PSB45 560 355 S | 560 | 355 | 652 | 40 | 1.49 | | |
| PSB45 560 400 S | 560 | 400 | 674 | 40 | 2.10 | | |
| PSB45 560 450 S | 560 | 450 | 700 | 70 | 2.70 | | |
| PSB45 560 500 S | 560 | 500 | 724 | 70 | 4.09 | | |
| PSB45 560 560 S | 560 | 560 | 754 | 70 | 6.20 | | |
| PSB45 630 80 S | 630 | 80 | 564 | 40 | | | |
| PSB45 630 100 S | 630 | 100 | 574 | 40 | | | |
| PSB45 630 125 S | 630 | 125 | 586 | 40 | | | |
| PSB45 630 160 S | 630 | 160 | 607 | 40 | | | |
| PSB45 630 200 S | 630 | 200 | 622 | 40 | 0.57 | | |
| PSB45 630 250 S | 630 | 250 | 643 | 40 | 0.80 | | |
| PSB45 630 315 S | 630 | 315 | 682 | 40 | 1.19 | | |
| PSB45 630 355 S | 630 | 355 | 700 | 40 | 1.45 | | |
| PSB45 630 400 S | 630 | 400 | 725 | 40 | 2.13 | | |
| PSB45 630 450 S | 630 | 450 | 750 | 70 | | | |

Vento

**Vento NV**
Bedrijvenpark Coupure 5
B-9700 Oudenaarde

Telefoon.: +32 (0)55 30 47 20
Fax: +32 (0)55 30 47 21
E-mail: info@vento.be

| CODE | D1 | D2 | I | IP | KG | DOOS | STUKS |
|---|---|---|---|---|---|---|---|
| PSB45 630 500 S | 630 | 500 | 775 | 70 | 3.96 | | |
| PSB45 630 560 S | 630 | 560 | 805 | 70 | | | |
| PSB45 630 630 S | 630 | 630 | 840 | 70 | | | |
| PSB45 710 80 S | 710 | 80 | 605 | 40 | | | |
| PSB45 710 100 S | 710 | 100 | 616 | 40 | | | |
| PSB45 710 125 S | 710 | 125 | 628 | 40 | | | |
| PSB45 710 160 S | 710 | 160 | 660 | 40 | | | |
| PSB45 710 200 S | 710 | 200 | 673 | 40 | | | |
| PSB45 710 250 S | 710 | 250 | 700 | 40 | | | |
| PSB45 710 315 S | 710 | 315 | 735 | 40 | | | |
| PSB45 710 355 S | 710 | 355 | 759 | 40 | 1.45 | | |
| PSB45 710 400 S | 710 | 400 | 780 | 40 | 2.10 | | |
| PSB45 710 450 S | 710 | 450 | 805 | 70 | 2.61 | | |
| PSB45 710 500 S | 710 | 500 | 830 | 70 | 3.85 | | |
| PSB45 710 560 S | 710 | 560 | 860 | 70 | | | |
| PSB45 710 630 S | 710 | 630 | 895 | 70 | | | |
| PSB45 710 710 S | 710 | 710 | 935 | 70 | | | |
| PSB45 800 80 S | 800 | 80 | 688 | 40 | | | |
| PSB45 800 100 S | 800 | 100 | 700 | 40 | | | |
| PSB45 800 125 S | 800 | 125 | 707 | 40 | | | |
| PSB45 800 160 S | 800 | 160 | 720 | 40 | | | |
| PSB45 800 200 S | 800 | 200 | 745 | 40 | | | |
| PSB45 800 250 S | 800 | 250 | 770 | 40 | | | |
| PSB45 800 315 S | 800 | 315 | 812 | 40 | | | |
| PSB45 800 355 S | 800 | 355 | 828 | 40 | | | |

Vento

**Vento NV**
Bedrijvenpark Coupure 5
B-9700 Oudenaarde

Telefoon.: +32 (0)55 30 47 20
Fax: +32 (0)55 30 47 21
E-mail: info@vento.be

| CODE | D1 | D2 | I | IP | KG | DOOS | STUKS |
|---|---|---|---|---|---|---|---|
| PSB45 800 400 S | 800 | 400 | 845 | 40 | | | |
| PSB45 800 450 S | 800 | 450 | 870 | 70 | | | |
| PSB45 800 500 S | 800 | 500 | 895 | 70 | | | |
| PSB45 800 560 S | 800 | 560 | 925 | 70 | | | |
| PSB45 800 630 S | 800 | 630 | 960 | 70 | | | |
| PSB45 800 710 S | 800 | 710 | 1000 | 70 | | | |
| PSB45 800 800 S | 800 | 800 | 1045 | 100 | | | |

**Vento NV**
Bedrijvenpark Coupure 5
B-9700 Oudenaarde

Telefoon.: +32 (0)55 30 47 20
Fax: +32 (0)55 30 47 21
E-mail: info@vento.be