# RCEPFX ~ Asymmetrisch Handgemaakt plat verloopstuk M/F met rubber



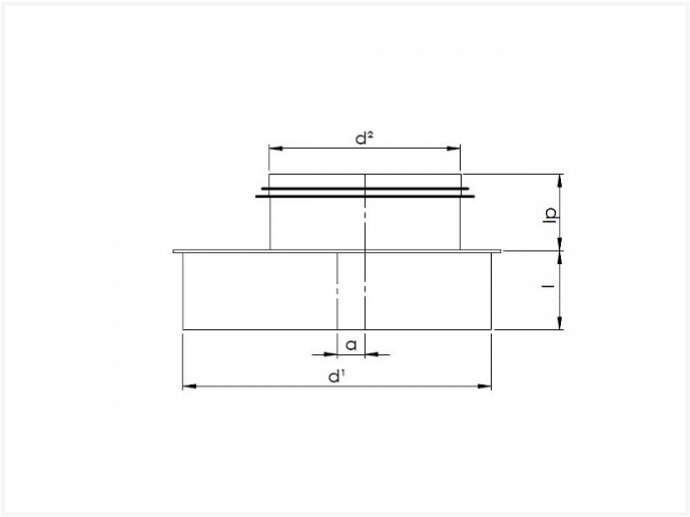


| CODE | D1 | D2 | I | A |
|---|---|---|---|---|
| RCEPFX 160 100 S | 160 | 100 | 41.5 | 10 |
| RCEPFX 200 125 S | 200 | 125 | 41.5 | 17 |
| RCEPFX 200 160 S | 200 | 160 | 41.5 | 0 |
| RCEPFX 250 125 S | 250 | 125 | 41.5 | 42 |
| RCEPFX 250 160 S | 250 | 160 | 41.5 | 25 |
| RCEPFX 250 200 S | 250 | 200 | 41.5 | 5 |
| RCEPFX 315 125 S | 315 | 125 | 41.5 | 75 |
| RCEPFX 315 160 S | 315 | 160 | 41.5 | 57 |
| RCEPFX 315 250 S | 315 | 250 | 41.5 | 12 |
| RCEPFX 355 200 S | 355 | 200 | 41.5 | 57 |
| RCEPFX 355 315 S | 355 | 315 | 51.5 | 0 |
| RCEPFX 400 200 S | 400 | 200 | 41.7 | 80 |
| RCEPFX 400 250 S | 400 | 250 | 41.7 | 55 |

**Vento NV**
Bedrijvenpark Coupure 5
B-9700 Oudenaarde

Telefoon.: +32 (0)55 30 47 20
Fax: +32 (0)55 30 47 21
E-mail: info@vento.be

| CODE | D1 | D2 | I | A |
|---|---|---|---|---|
| RCEPFX 400 315 S | 400 | 315 | 51.7 | 22 |
| RCEPFX 400 355 S | 400 | 355 | 51.7 | 2 |
| RCEPFX 500 400 S | 500 | 400 | 52 | 30 |

**Vento NV**
Bedrijvenpark Coupure 5
B-9700 Oudenaarde

Telefoon.: +32 (0)55 30 47 20
Fax: +32 (0)55 30 47 21
E-mail: info@vento.be