# DSRB ~ Regelklep met afgesneden klepblad



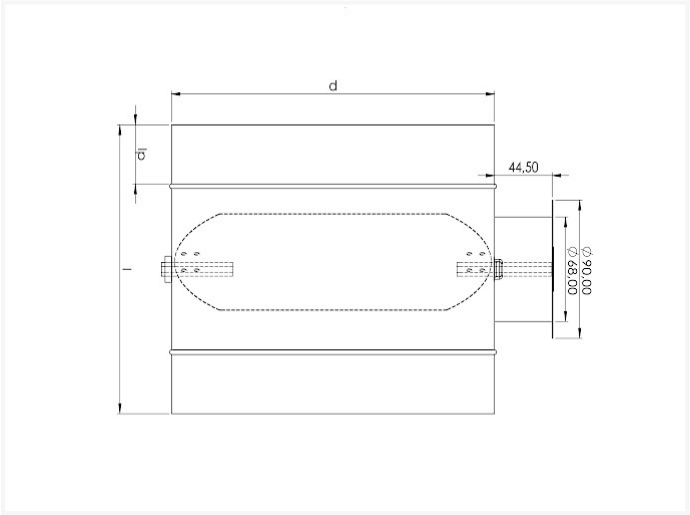


## Technische specificaties

| DIAMETER | L | E | DOOS | STUKS |
|---|---|---|---|---|
| 80 | 90 | 40 | P6 | 26 |
| 100 | 90 | 40 | P6 | 40 |
| 125 | 90 | 40 | P6 | 27 |
| 150 | 90 | 40 | P4 | 30 |
| 160 | 90 | 40 | P4 | 27 |
| 180 | 90 | 40 | P4 | 20 |
| 200 | 90 | 40 | P2 | 36 |
| 224 | 140 | 45 | P2 | 30 |
| 250 | 140 | 45 | P1 | 36 |
| 280 | 140 | 45 | P1 | 32 |
| 300 | 140 | 45 | P1 | 32 |
| 315 | 140 | 45 | P1 | 28 |
| 355 | 140 | 45 | P1 | 20 |

**Vento NV**
Bedrijvenpark Coupure 5
B-9700 Oudenaarde

Telefoon.: +32 (0)55 30 47 20
Fax: +32 (0)55 30 47 21
E-mail: info@vento.be

| DIAMETER | L | E | DOOS | STUKS |
|---|---|---|---|---|
| 400 | 140 | 45 | P1 | 15 |
| 450 | | | P1 | 10 |
| | | | | |

**Vento NV**
Bedrijvenpark Coupure 5
B-9700 Oudenaarde

Telefoon.: +32 (0)55 30 47 20
Fax: +32 (0)55 30 47 21
E-mail: info@vento.be