# DSB ~ Serrande + leva in PVC



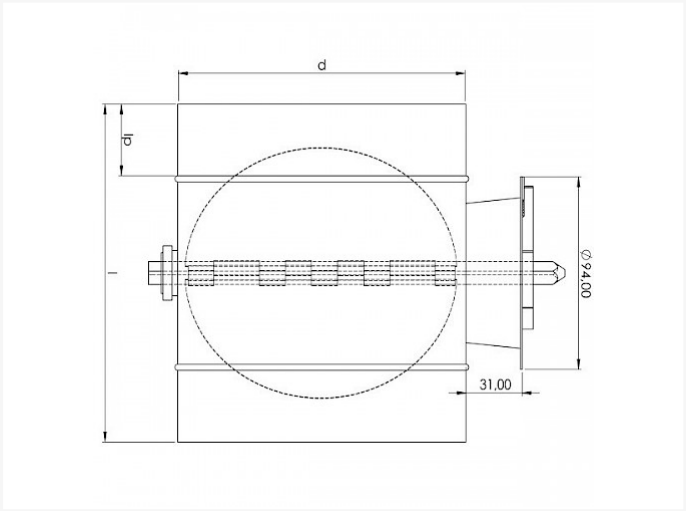


## Scheda tecnica

| DIAMETRO | H | KG | SCATOLA | PEZZI |
|---|---|---|---|---|
| 80 | 40 | 0.39 | P6 | 48 |
| 100 | 40 | 0.46 | P6 | 40 |
| 125 | 40 | 0.5 | P6 | 27 |
| 150 | 40 | 0.6 | P4 | 30 |
| 160 | 40 | 0.69 | P4 | 24 |
| 180 | 40 | 0.80 | P4 | 20 |
| 200 | 40 | 0.91 | P2 | 36 |
| 224 | 40 | 1.02 | P1 | 60 |
| 250 | 40 | 1.18 | P1 | 48 |
| 280 | 40 | 1.38 | P1 | 40 |
| 300 | 40 | 1.39 | P1 | 32 |
| 315 | 40 | 1.4 | P1 | 32 |
| 355 | 40 | 1.81 | P1 | 24 |

**Vento NV**
Bedrijvenpark Coupure 5
B-9700 Oudenaarde

Telefoon.: +32 (0)55 30 47 20
Fax: +32 (0)55 30 47 21
E-mail: info@vento.be

| DIAMETRO | H | KG | SCATOLA | PEZZI |
|---|---|---|---|---|
| 400 | 40 | 2.2 | P1 | 20 |

**Vento NV**
Bedrijvenpark Coupure 5
B-9700 Oudenaarde

Telefoon.: +32 (0)55 30 47 20
Fax: +32 (0)55 30 47 21
E-mail: info@vento.be